Aen.-Nr. Rev. no.	Feld Zone	Art der Aenderung	Revision	Tag Date	Name Name	M M
117075		NEU EINGEFUEHRT	*INTRODUCED*	05.10.98	SCHA.	
00511264		POS. 3 WAR 110.398 SWF 31.361/2	*ITEM 3 WAS 110.398 SWF 31.361/2*			
		WIRD 107.961 SWF 31.361/1	*GETS 107.961 SWF 31.361/1*			
		POS. 4 WAR 182.006 WIRD 191.492	*ITEM 4 WAS 182.006 GETS 191.492*			
		POS. 5 WAR 181.994 WIRD 186.732	*ITEM 5 WAS 181.994 GETS 186.732*			
		POS. 10 WAR 913.787 WIRD 901.941	*ITEM 10 WAS 913.787 GETS 901.941*			
		POS. 11 WAR 916.775 1 SCHEIBE OF	*ITEM 11 WAS 916.775 1 WASHER N CHAM*			
		SWF 21.302 WIRD 906.098 1 RING	*SWF 21.302 GETS 906.098 1 RING*			
		SWF 21.338	*SWF 21.338*			
		POS. 12 WAR 906.098 1 RING SWF 21.338	*ITEM12 WAS 906.098 1 RING SWF 21.338*			
		WIRD 907.283 1 SCHEIBE OF SWF 21.302	*GETS 907.283 1 WASHER N CHAM*			
		NACH BEDARF	*SWF 21.302 AS REQUIRED*			
		POS. 13 WAR 921.218 WIRD 905.567	*ITEM 13 WAS 921.218 GETS 905.567*			
		POS. 14 WAR 905.641 WIRD 904.845	*ITEM 14 WAS 905.641 GETS 904.845*			
		POS. 21 WAR 900.214 WIRD 908.224	*ITEM 21 WAS 900.214 GETS 908.224*			
		POS. 22 WAR 903.026 1 SCHEIBE OF	*ITEM 22 WAS 903.026 1 WASHER N CHAM*			
		SWF 21.302 WIRD 907.147 1 RING	*SWF 21.302 GETS 907.147 1 RING*			
		SWF 21.338	*SWF 21.338*			
		POS. 23 WAR 907.147 1 RING SWF 21.338	*ITEM23 WAS 907.147 1 RING SWF 21.338*			
		WIRD 903.026 1 SCHEIBE OF SWF 21.302	*GETS 903.026 1 WASHER N CHAM*			
		NACH BEDARF	*SWF 21.302 AS REQUIRED*			
		POS. 31 099.491 SWF 13.201 FETT	*ITEM 31 099.491 SWF 13.201 GREASE*			
		NACH BEDARF ZUGEFUEGT	*AS REQUIRED ADDED*			
	F15	ANZUGSMOMENT POS. 7 WAR 20-25 NM	*TIGHTENING TORQUE ITEM7 WAS 20-25 NM*			
		WIRD 11-14 NM	*GETS 11-14 NM*			K
	J16	MASS WAR 189.4 WIRD (189.4)	*DIM. WAS 189.4 GETS (189.4)*			
	H15	MASS WAR 95 WIRD (95)	*DIM. WAS 95 GETS (95)*			
	J11	MASS WAR 60 WIRD (60)	*DIM. WAS 60 GETS (60)*			
	H11	MASS WAR 108 WIRD (107.7)	*DIM. WAS 108 GETS (107.7)*			
	H9	MASS WAR 107 WIRD (107)	*DIM. WAS 107 GETS (107)*			
	K5	MASS WAR R34.2 WIRD (R34.2)	*DIM. WAS R34.2 GETS (R34.2)*			
	J5	MASS WAR 80 WIRD (80)	*DIM. WAS 80 GETS (80)*			
	H5	MASS WAR R25.2 WIRD (R25.2)	*DIM. WAS R25.2 GETS (R25.2)*	28.02.00	SCHA.	
01511350		ANZUGSMOMENT POS. 7 WAR 11 BIS 14 NM	*TIGHT. TORQUE ITEM 7 WAS 11 TO 14 NM*			
		WIRD 20 BIS 25 NM	*TO BE 20 TO 25 NM*	03.07.01	STÄLLER	
03511323	F16	ANZUGSMOMENT POS.9 WAR 5-7Nm WIRD	*TIGHTENING TORQUE ITEM 9 WAS 5-7Nm*			
		4.5-6Nm	*BEC. 4.5-6Nm*	16.05.03	KÖCHLER	

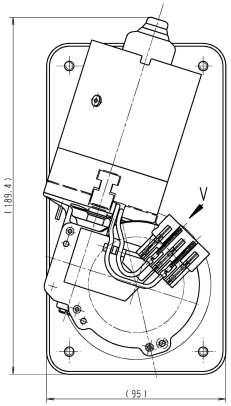

MOTOR MUSS BEI PRUEFSPANNUNG UND BETRIEBSMOMENT IN PARKSTELLUNG LAUFEN (AUSLIEFERUNGSZUSTAND)
MOTOR MUST RUN TO PARKING POSITION UNDER OPERATING TORQUE, WITH TEST VOLTAGE (CONDITION AS-DELIVERED)

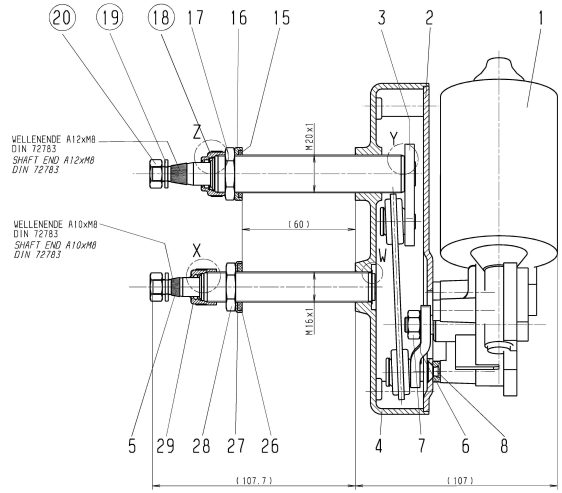

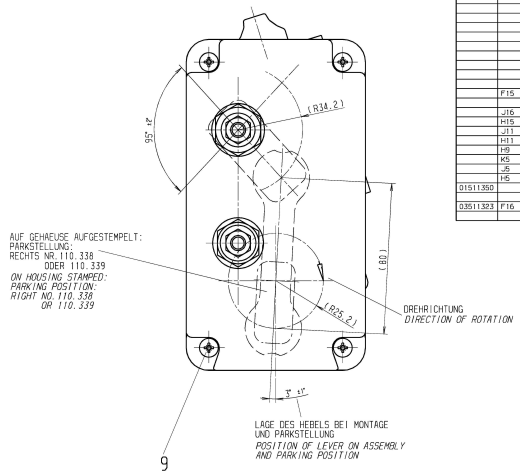

FOB	29.02.00	WA	00511264
FOG	05.10.98	TEV	117075
Freigabe-St. Release-level	Datum Date	genehmigt approved	Referenz Reference

bez. S-Nr. *for part-No.* 110.339

Pos. Item	Sachnr. Part No.	Menge Quant.	K-Bez	K-Benennung	Title	Zeichnung-Nr. Drawing No.	Form. Form.	Blatt Sheet	Bem. Rem.
31	099.491	0.00		FETT	*GREASE*	SWF 13.201			05
30	099.496	0.00		FETT	*GREASE*	SWF 13.201			05
29	907.054	1.00		KAPPE	*CAP*	907.054			
28	900.748	1.00		MUTTER SKT	*HEXAGONAL NUT*	SWF 21.203			
27	900.652	1.00		SCHEIBE BD	*FLANGE WASHER*	SWF 21.307			
26	900.032	1.00		SCHEIBE OF	*WASHER N CHAM*	SWF 21.304			
25	908.453	1.00		RING SI	*CIRCLIP*	SWF 21.321			
24	905.278	1.00		SCHEIBE OF	*WASHER N CHAM*	SWF 21.302			
23	903.026	1.00		SCHEIBE OF	*WASHER N CHAM*	SWF 21.302			05
22	907.147	1.00		RING	*RING*	SWF 21.338			
21	908.224	1.00		SCHEIBE FE	*SPRING WASHER*	SWF 21.305			
20	900.026	2.00		MUTTER SKT	*HEXAGONAL NUT*	SWF 21.201			
19	902.137	2.00		RING FE	*SPRING RING*	SWF 21.312			
18	905.557	1.00		KAPPE	*CAP*	905.557			
17	900.750	1.00		MUTTER SKT	*HEXAGONAL NUT*	SWF 21.203			
16	905.560	1.00		SCHEIBE	*DISC*	905.560			
15	905.573	1.00		SCHEIBE OF	*WASHER N CHAM*	SWF 21.304			
14	904.845	1.00		RING SI	*CIRCLIP*	SWF 21.321			
13	905.567	1.00		SCHEIBE OF	*WASHER N CHAM*	SWF 21.302			
12	907.283	1.00		SCHEIBE OF	*WASHER N CHAM*	SWF 21.302			05
11	906.098	1.00		RING	*RING*	SWF 21.338			
10	901.941	1.00		SCHEIBE FE	*SPRING WASHER*	SWF 21.305			
09	912.030	4.00		SCHRAUBE LKSF	*SCREW CO 57*	912.030			
08	914.529	3.00		SCHRAUBE SMK	*SCREW CSK C*	914.529			
07	900.026	1.00		MUTTER SKT	*HEXAGONAL NUT*	SWF 21.201			
06	912.064	1.00		SCHEIBE FE	*SPRING WASHER*	SWF 21.305			
05	186.732	1.00	ZUG	ACHSE WISCH	*WIPER SHAFT*	186.732			
04	191.492	1.00	ZUG	GEHAEUSE	*HOUSING*	191.492			
03	107.961	1.00		DESTANGE	*LIMAGE UNIT*	SWF 31.361		1	
02	191.487	1.00		PLATTE	*PLATE*	191.487			
01	404.110	1.00	SWMK	WISCHERMOT MK	*WIPERMOTOR MK*	404.110			

bez. Sach-Nr. *for part-No.* 110.339 — Bemerkungen n. SWF 04.302 *Remarks to SWF 04.302*

ANZUGSMOMENTE — *TIGHTENING TORQUE*

POS. 7 = 20	BIS 25 NM	*ITEM 7 = 20*	*TO 25 NM*
POS. 8 = 12	BIS 15 NM	*ITEM 8 = 12*	*TO 15 NM*
POS. 9 = 4.5	BIS 6 NM	*ITEM 9 = 4.5*	*TO 6 NM*
POS. 17 = 14	BIS 20 NM	*ITEM 17 = 14*	*TO 20 NM*
POS. 20 = 16	BIS 20 NM	*ITEM 20 = 16*	*TO 20 NM*
POS. 28 = 14	BIS 20 NM	*ITEM 28 = 14*	*TO 20 NM*

VOR DEMONTAGE DES GEHAEUSES, DIE SO GEKENNZEICHNETEN POSITIONEN LOESEN ○
BEFORE REMOVING HOUSING ITEM MARKED WITH ○ MUST BE REMOVED

ALLE BEWEGLICHEN TEILE GEFETTET MIT ◑
ALL MOVING PARTS GREASED WITH

RINGE GEFETTET MIT ◭
RINGS GREASED WITH

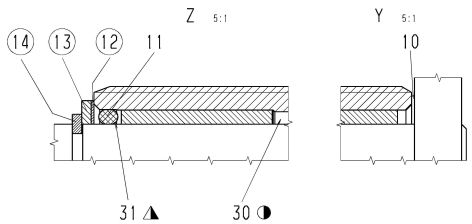

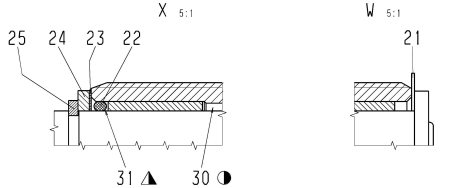

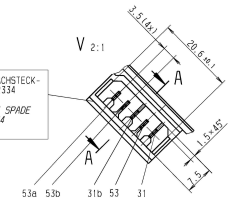

PASSEND ZU 5-POLIGEM FLACHSTECK-HUELSENGEHAEUSE AK-NR. 2334 FA.REINSHAGEN
TO SUIT TO 5-WAY FEMALE SPADE TERMINAL HSG AK-NO. 2334 FIRM REINSHAGEN

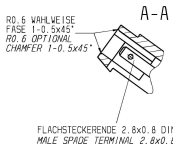

FLACHSTECKERENDE 2.8x0.8 DIN 46244
MALE SPADE TERMINAL 2.8x0.8 DIN 46244

SCHALTPLAN
CIRCUIT DIAGRAM

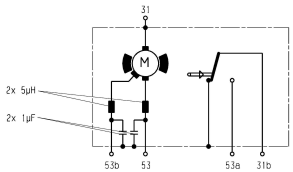

LEISTUNGSWERTE
CHARACTERISTICS

NENNSPANNUNG *NOMINALE VOLTAGE*	Un	=	SIEHE TABELLE *SEE TABLE*
PRUEFSPANNUNG *TEST VOLTAGE*	Up	=	SIEHE TABELLE *SEE TABLE*
DREHZAHL *SPEED*	n_{B1}	=	35±4 MIN^{-1}
DREHZAHL *SPEED*	n_{B2}	=	55±5 MIN^{-1}
ANZUGSMOMENT *STARTING TORQUE*	M_A	=	24 NM
BETR.MOMENT *OPERATING TORQUE*	M_B	=	1 NM

110.339	T	24 V	26 V
110.338	F	12 V	13 V
SACH-NR. *PART-NO.*	FORM.	NENNSPANNUNG *NOMINALE VOLTAGE*	PRUEFSPANNUNG *TEST VOLTAGE*

		Tag Date	Name Name
Bearb. Drawn		05.10.98	SCHA.
Gepr. Checked		25.03.99	THOMAS
Norm. Stds. appd			

Alle Masse in mm *All dimensions in mm* — Massstab Scale 1:1 — Symbol nach DIN 5347 05.135 — Symbol SP 05.135

Valeo

Kurz-Benennung *Title*: WISCHERANLAGE *WIPER SYSTEM*

Art-Nr Cat. 0100

UR G — Zeichnungs-Nr *Drawing no.* 110.338 — Blatt *Sheet* 1 — von *of* — Format F

Valeo Auto-Electric GmbH & CO KG, Stuttgarter Str. 119, D-74321 Bietigheim — Ers.f. *Sub. for* 110.338 — Ers.d. *Sub. by*

Schutzvermerk nach DIN 34 beachten, copyright reserved

31	099.491	0.00		FETT	*GREASE*	SWF 13.201	05
30	099.496	0.00		FETT	*GREASE*	SWF 13.201	05
29	907.054	1.00		KAPPE	*CAP*	907.054	
28	900.748	1.00		MUTTER SKT	*HEXAGONAL NUT*	SWF 21.203	
27	900.652	1.00		SCHEIBE BD	*FLANGE WASHER*	SWF 21.307	
26	900.032	1.00		SCHEIBE OF	*WASHER N CHAM*	SWF 21.304	
25	908.453	1.00		RING SI	*CIRCLIP*	SWF 21.321	
24	905.278	1.00		SCHEIBE OF	*WASHER N CHAM*	SWF 21.302	
23	903.026	1.00		SCHEIBE OF	*WASHER N CHAM*	SWF 21.302	05
22	907.147	1.00		RING	*RING*	SWF 21.338	
21	908.224	1.00		SCHEIBE FE	*SPRING WASHER*	SWF 21.305	
20	900.026	2.00		MUTTER SKT	*HEXAGONAL NUT*	SWF 21.201	
19	902.137	2.00		RING FE	*SPRING RING*	SWF 21.312	
18	905.557	1.00		KAPPE	*CAP*	905.557	
17	900.750	1.00		MUTTER SKT	*HEXAGONAL NUT*	SWF 21.203	
16	905.560	1.00		SCHEIBE	*DISC*	905.560	
15	905.573	1.00		SCHEIBE OF	*WASHER N CHAM*	SWF 21.304	
14	904.845	1.00		RING SI	*CIRCLIP*	SWF 21.321	
13	905.567	1.00		SCHEIBE OF	*WASHER N CHAM*	SWF 21.302	
12	907.283	1.00		SCHEIBE OF	*WASHER N CHAM*	SWF 21.302	05
11	906.098	1.00		RING	*RING*	SWF 21.338	
10	901.941	1.00		SCHEIBE FE	*SPRING WASHER*	SWF 21.305	
09	912.030	4.00		SCHRAUBE LKSF	*SCREW CO 57*	912.030	
08	914.529	3.00		SCHRAUBE SMK	*SCREW CSK C*	914.529	
07	900.026	1.00		MUTTER SKT	*HEXAGONAL NUT*	SWF 21.201	
06	912.064	1.00		SCHEIBE FE	*SPRING WASHER*	SWF 21.305	
05	186.732	1.00	ZUG	ACHSE WISCH	*WIPER SHAFT*	186.732	
04	191.492	1.00	ZUG	GEHAEUSE	*HOUSING*	191.492	
03	107.961	1.00		DESTANGE	*LIMAGE UNIT*	SWF 31.361	1
02	191.487	1.00		PLATTE	*PLATE*	191.487	
01	404.109	1.00	SWMK	WISCHERMOT MK	*WIPERMOTOR MK*	404.109	

bez. Sach-Nr. *for part-No.* 110.338 — Bemerkungen n. SWF 04.302 *Remarks to SWF 04.302*